The EMPIR initiative is co-funded by the European Union's Horizon 2020 research and innovation programme and the EMPIR Participating States

MetEOC-3 is funded under EMPIR grant 16ENV03

Metrology for Earth Observation and Climate

Towards Uncertainty & Error-Correlation Evaluation for the S3/OLCI L1 Product

Sam Hunt

National Physical Laboratory

Summary

- FIDUCEO Project Uncertainty Analysis Methodology
- Application to OLCI L1 product
- Comments & Questions

Fiduceo Aims

FIDUCEO brings insights from metrology to the observation of Earth's climate from space.

New versions of four key Fundamental Climate Data Records (FCDRs) will be created that include state-of-the-art information about observational uncertainty. We will demonstrate how to propagate that information to derived geophysical datasets — i.e., five important climate data records (CDRs) will be developed with traceable uncertainty and stability estimates.

Fiduceo Methods

- Measurement Function Centred Analysis
- Effects Table Reporting
- Consistent File format

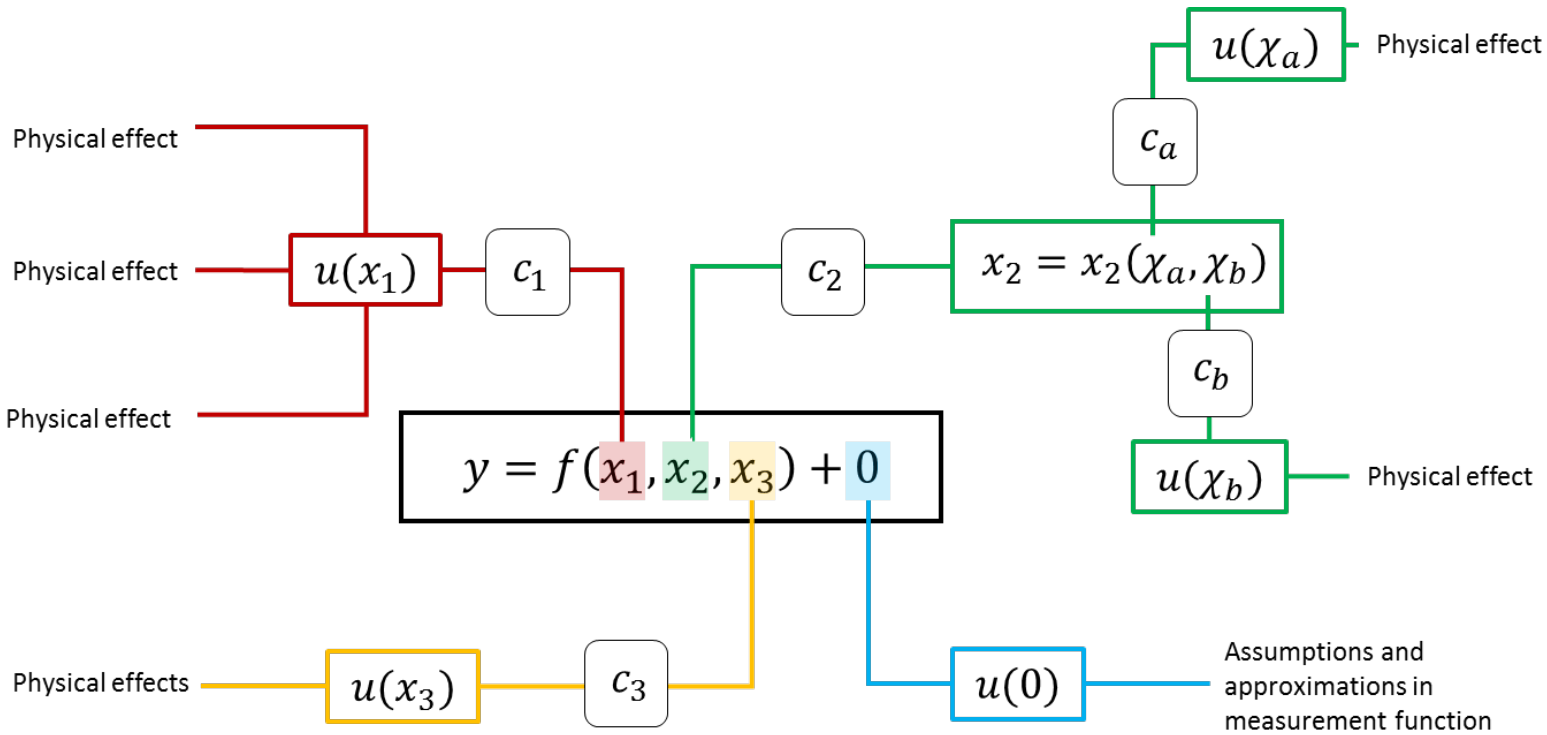

Measurement Function Analysis

Uncertainty Tree

- Given the measurement equation we then need to investigate all the possible sources of uncertainty that feed into the final total
- Involves thinking about each term in the measurement function and breaking it down into all sub-processes down to the originating process for uncertainty
- We represent this process by an Uncertainty Tree Diagram

$$y = f(x_1, x_2, x_3) + 0$$

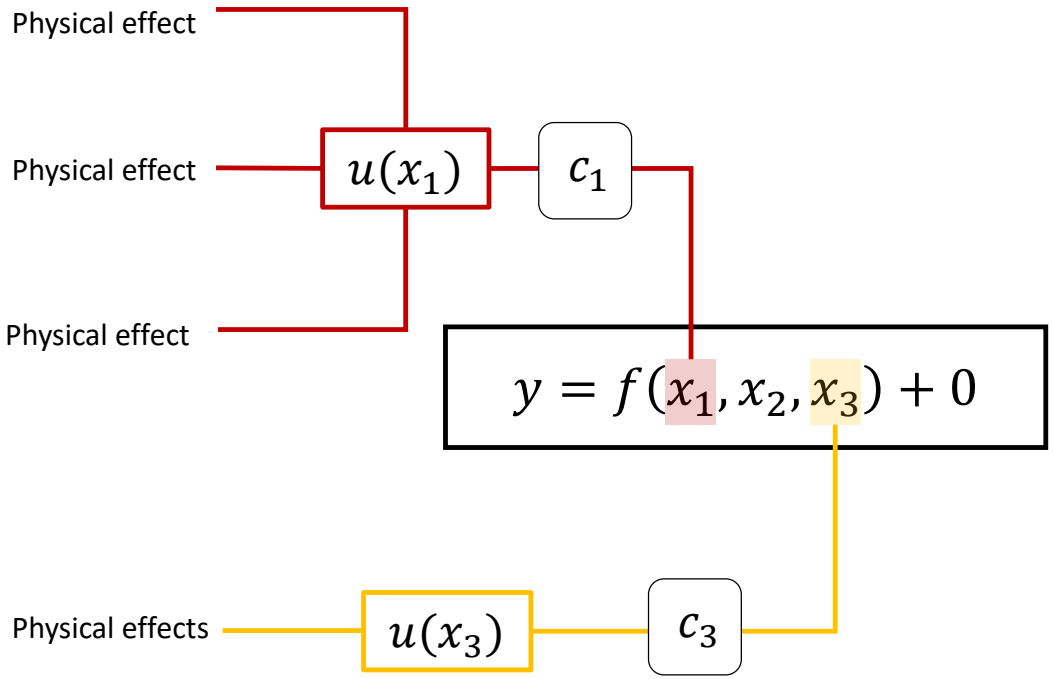
Physical effect
Physical effect
Physical effect
$u(x_1)$
c_1
$y = f(x_1, x_2, x_3) + 0$
Physical effects
$u(x_3)$
c_3

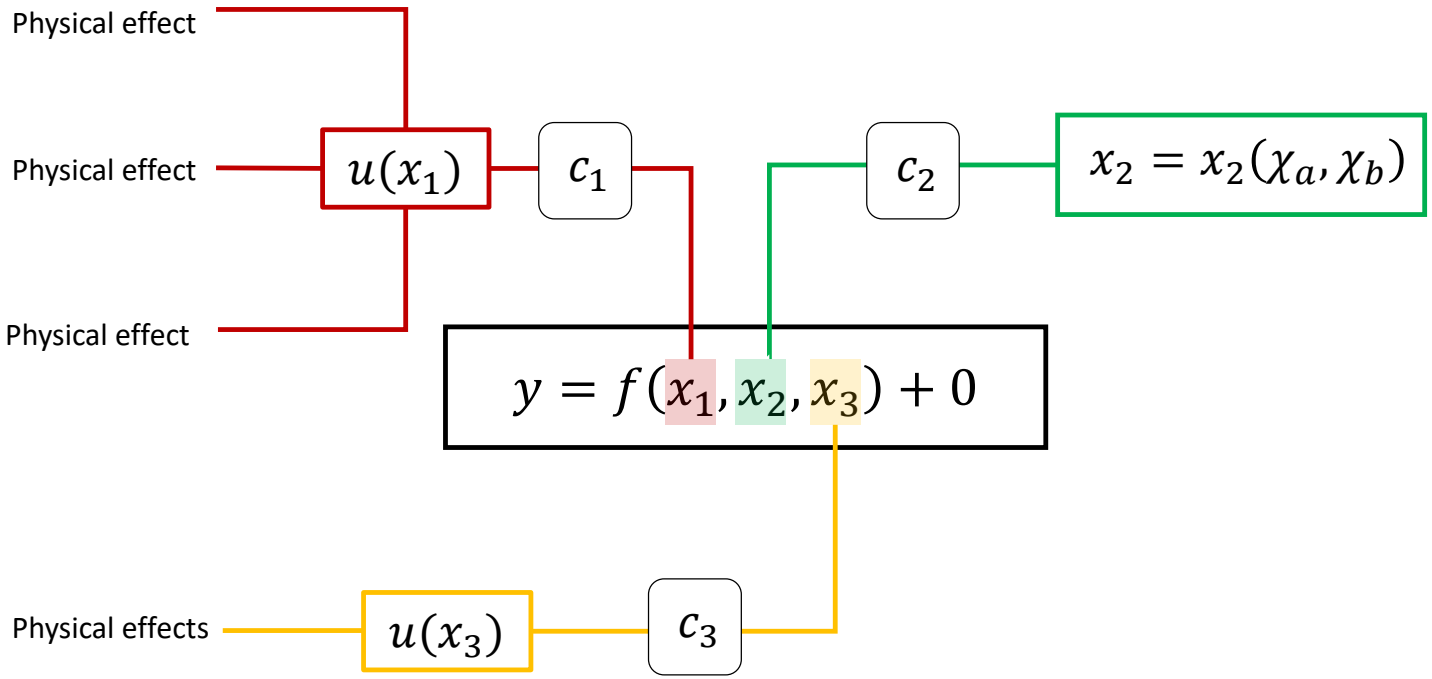
Physical effect
Physical effect
Physical effect
$u(x_1)$
c_1
c_2
$x_2 = x_2(\chi_a, \chi_b)$
$y = f(x_1, x_2, x_3) + 0$
Physical effects
$u(x_3)$
c_3

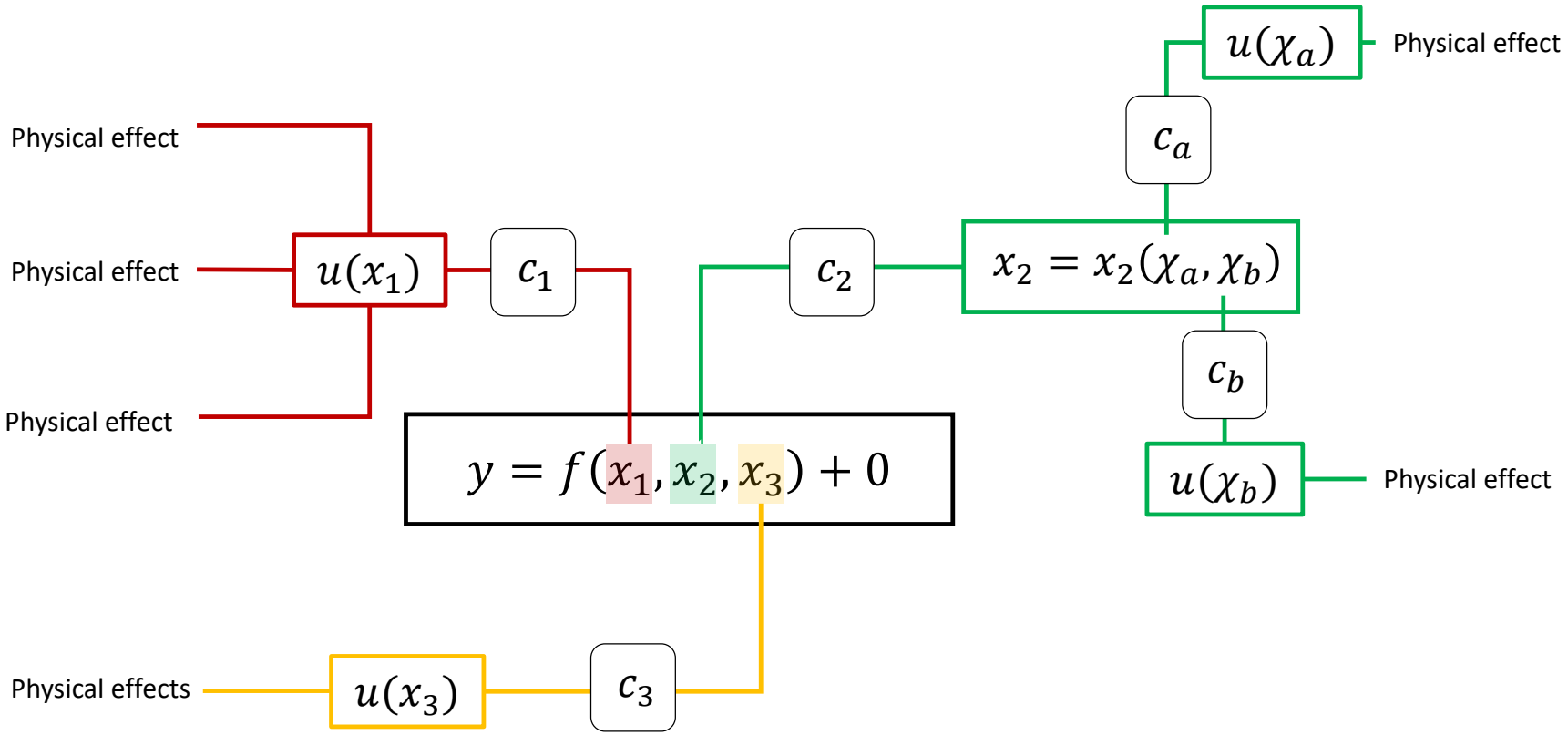
Physical effect
Physical effect
Physical effect
$u(x_1)$
c_1
c_2
$x_2 = x_2(\chi_a, \chi_b)$
c_a
$u(\chi_a)$
Physical effect
c_b
$u(\chi_b)$
Physical effect
$y = f(x_1, x_2, x_3) + 0$
Physical effects
$u(x_3)$
c_3

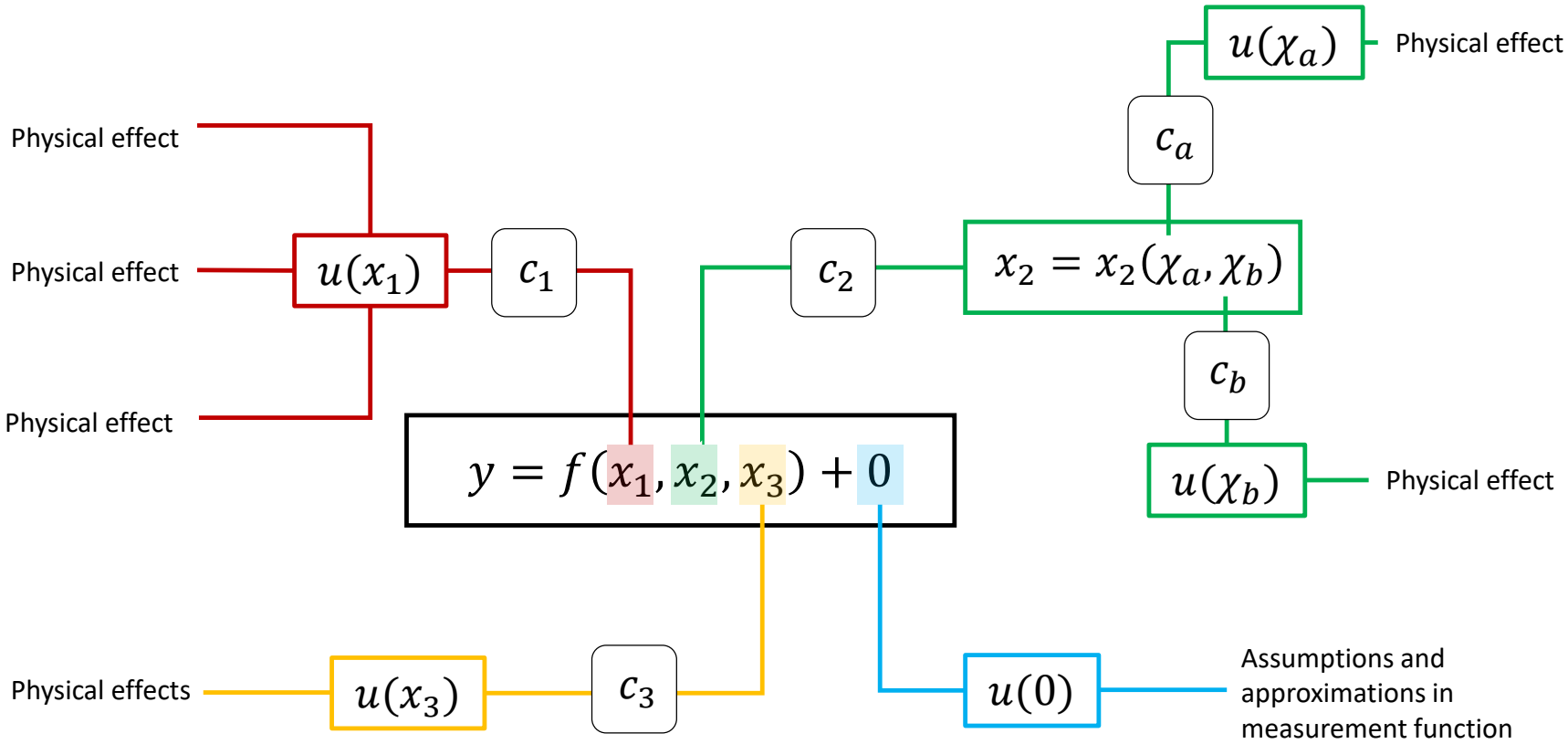
$u(\chi_a)$
Physical effect
c_a
Physical effect
Physical effect
$u(x_1)$
c_1
c_2
$x_2 = x_2(\chi_a, \chi_b)$
c_b
Physical effect
$y = f(x_1, x_2, x_3) + 0$
$u(\chi_b)$
Physical effect
Physical effects
$u(x_3)$
c_3
$u(0)$
Assumptions and approximations in measurement function

+0 Term

- Appears in a number of places
- Intended to force investigation of assumptions
  - To think about and characterize known unknowns
  - Mostly via Type-B uncertainty estimates
- Not measured but via expert knowledge (including modelling)

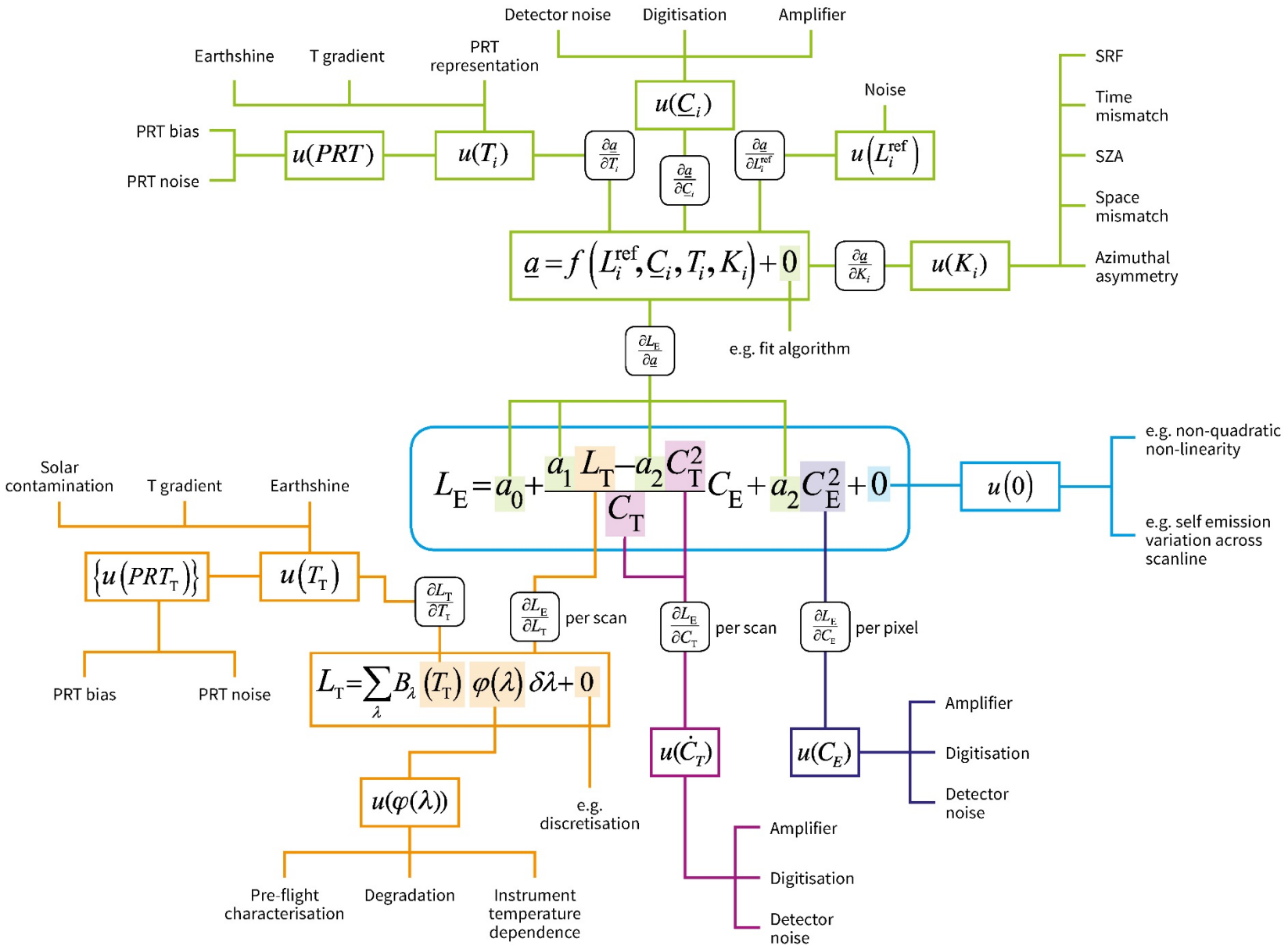
Detector noise
Digitisation
Amplifier
Earthshine
T gradient
PRT representation
$u(\underline{C}_i)$
Noise
PRT bias
PRT noise
$u(PRT)$
$u(T_i)$
$\frac{\partial \underline{a}}{\partial T_i}$
$\frac{\partial \underline{a}}{\partial \underline{C}_i}$
$\frac{\partial \underline{a}}{\partial L_i^{ref}}$
$u(L_i^{ref})$
SRF
Time mismatch
SZA
Space mismatch
Azimuthal asymmetry
$\underline{a} = f(L_i^{ref}, \underline{C}_i, T_i, K_i) + 0$
$\frac{\partial \underline{a}}{\partial K_i}$
$u(K_i)$
$\frac{\partial L_E}{\partial \underline{a}}$
e.g. fit algorithm
$L_E = a_0 + \frac{a_1 L_T - a_2 C_T^2}{C_T} C_E + a_2 C_E^2 + 0$
$u(0)$
e.g. non-quadratic non-linearity
e.g. self emission variation across scanline
Solar contamination
T gradient
Earthshine
$\{u(PRT_T)\}$
$u(T_T)$
$\frac{\partial L_T}{\partial T_T}$
$\frac{\partial L_E}{\partial L_T}$ per scan
$\frac{\partial L_E}{\partial C_T}$ per scan
$\frac{\partial L_E}{\partial C_E}$ per pixel
PRT bias
PRT noise
$L_T = \sum_\lambda B_\lambda (T_T)\, \varphi(\lambda)\, \delta\lambda + 0$
$u(\dot{C}_T)$
$u(C_E)$
Amplifier
Digitisation
Detector noise
$u(\varphi(\lambda))$
e.g. discretisation
Amplifier
Digitisation
Detector noise
Pre-flight characterisation
Degradation
Instrument temperature dependence

Table descriptor		Comments	Example
Name of effect		A unique name	Internal calibratio count noise
Affected term in measurement function		Name and standard symbol	
Instruments in the series affected		Identifier	All instruments all
Correlation type and form	Pixel-to-pixel [pixels]	One of the types	Rectangular abso
	from scanline to scanline [scanlines]		Triangular relative
	between images [images]		N/A for orbiting sa
	Between orbits [orbit]		Random
	Over time [time]		Random
Correlation scale	Pixel-to-pixel [pixels]	As needed to define type	[-∞,∞] (fully correl across scan)
	from scanline to scanline [scanlines]		n = 51 (51 scanlir averaged in rollin
	between images		N/A for orbiting sa

Effects Table Reporting

Table descriptor		Comments
Name of effect		A unique name
Affected term in measurement function		Name and standard symbol
Instruments in the series affected		Identifier
Correlation type and form	Pixel-to-pixel [pixels]	One of the types
	from scanline to scanline [scanlines]	
	between images [images]	
	Between orbits [orbit]	
	Over time [time]	
Correlation scale	Pixel-to-pixel [pixels]	As needed to define type
	from scanline to scanline [scanlines]	
	between images [images]	
	Between orbits [orbit]	
	Over time [time]	
Channels/bands	List of channels / bands affected	Channel names
	Error correlation coefficient matrix	A matrix
Uncertainty	PDF shape	Functional form
	units	Units
	magnitude	
Sensitivity coefficient		Value, equation or parameterisation of sensitivity of measurand to term

Error-Correlation – Why do we care?

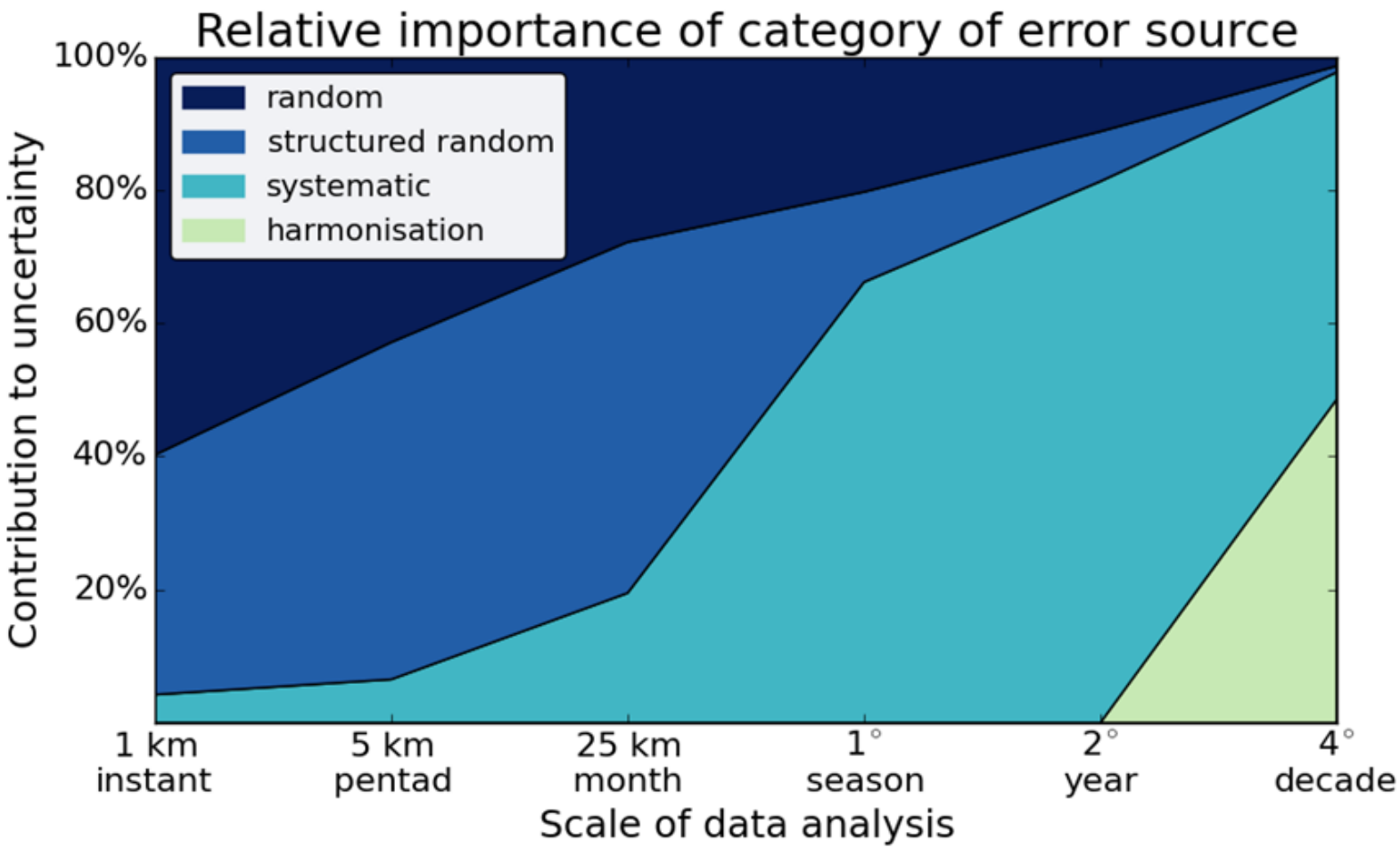

Metrology for Earth Observation and Climate

Fiduceo

Consistent File Format – Full & Easy FCDR

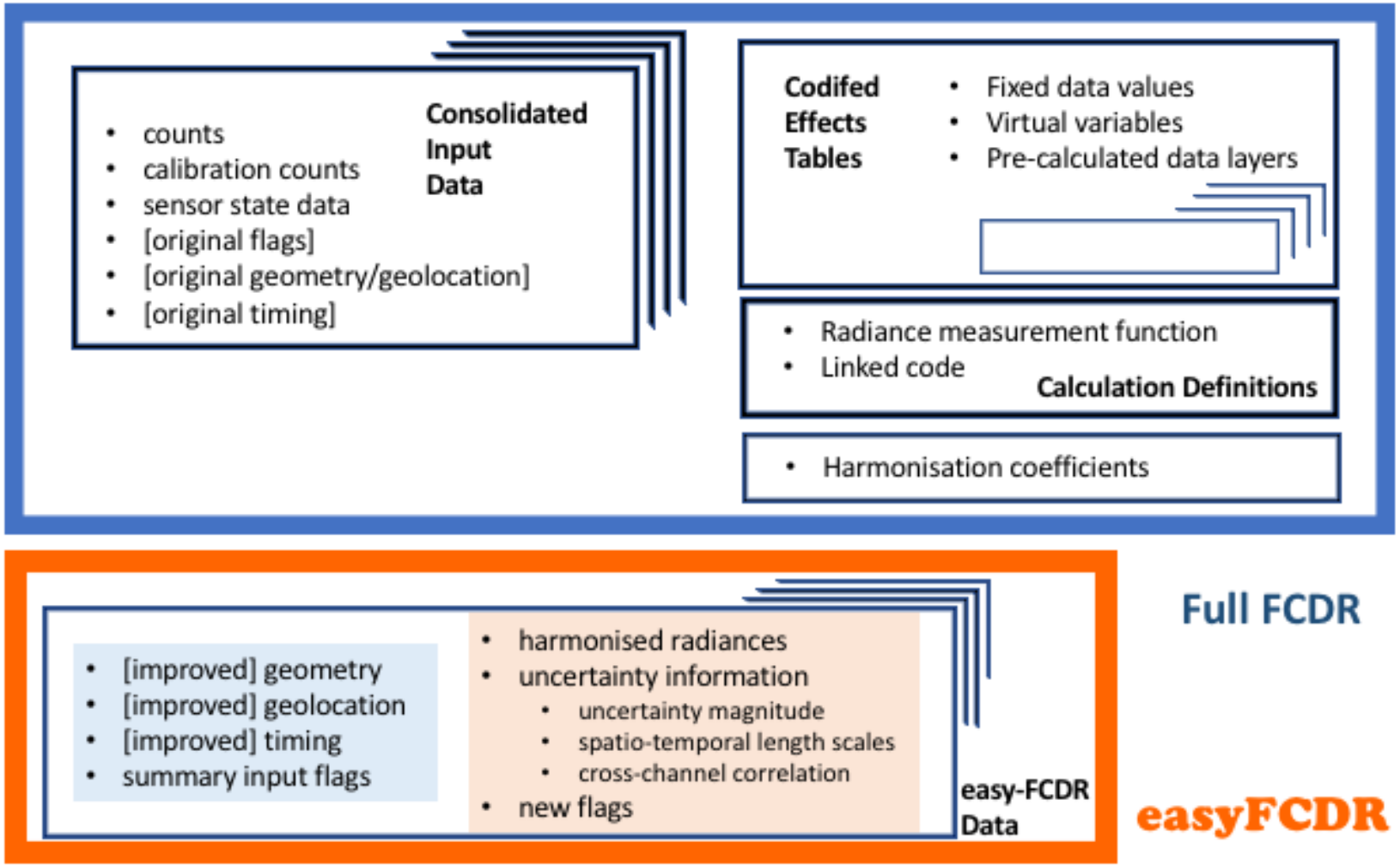

Fiduceo Methods

- Measurement Function Centred Analysis
- Effects Table Reporting
- Consistent File format

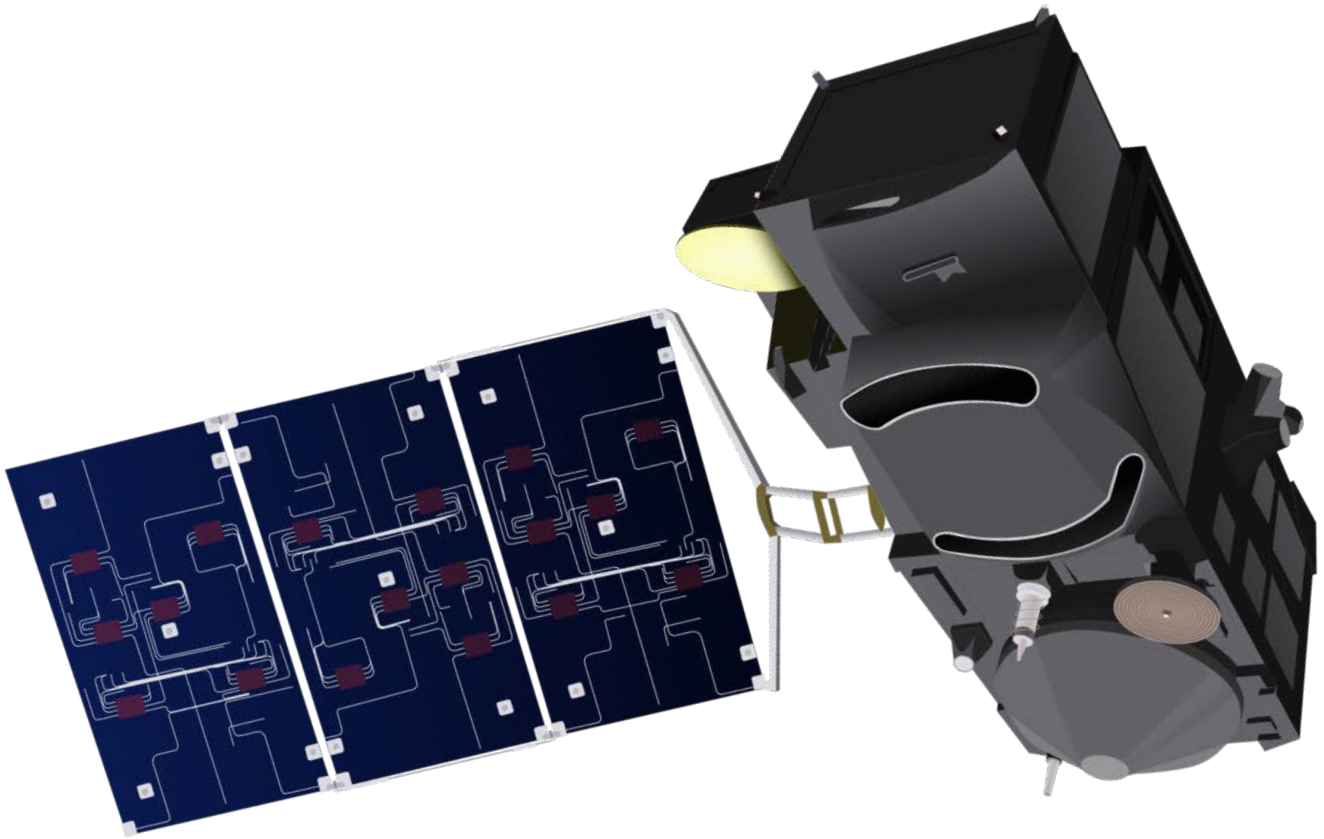

Application to S3/OLCI L1

$$L_{b,k,m} = \frac{1}{A_{b,k,m}}\left(NL_{g,m}^{-1}\left[X_{b,k,m}\right] - C_{b,k,m} - S_{b,k,m}\right) - SL + 0$$

OLCI Level 1 Uncertainty Tree Diagram

$$L_{b,k,m} = \frac{1}{A_{b,k,m}}\left(NL_{g,m}^{-1}\left[X_{b,k,m}\right] - C_{b,k,m} - S_{b,k,m}\right) - SL + 0$$

$\frac{\partial L_{b,k,m}}{\partial X_{b,k,m}}$ *per pixel*

$u(X_{b,k,m})$

Detector noise

OLCI Level 1 Uncertainty Tree Diagram

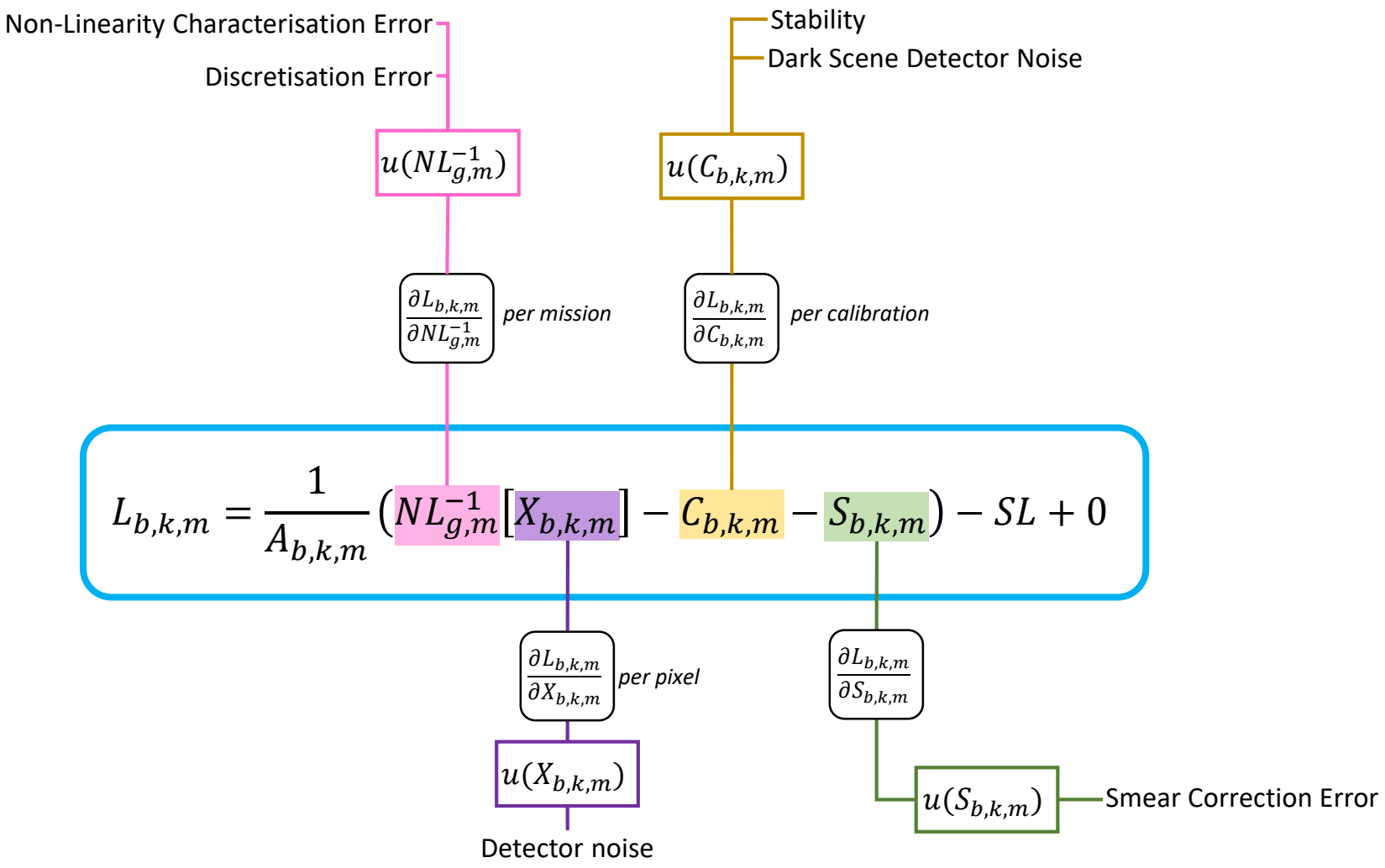

OLCI Level 1 Uncertainty Tree Diagram

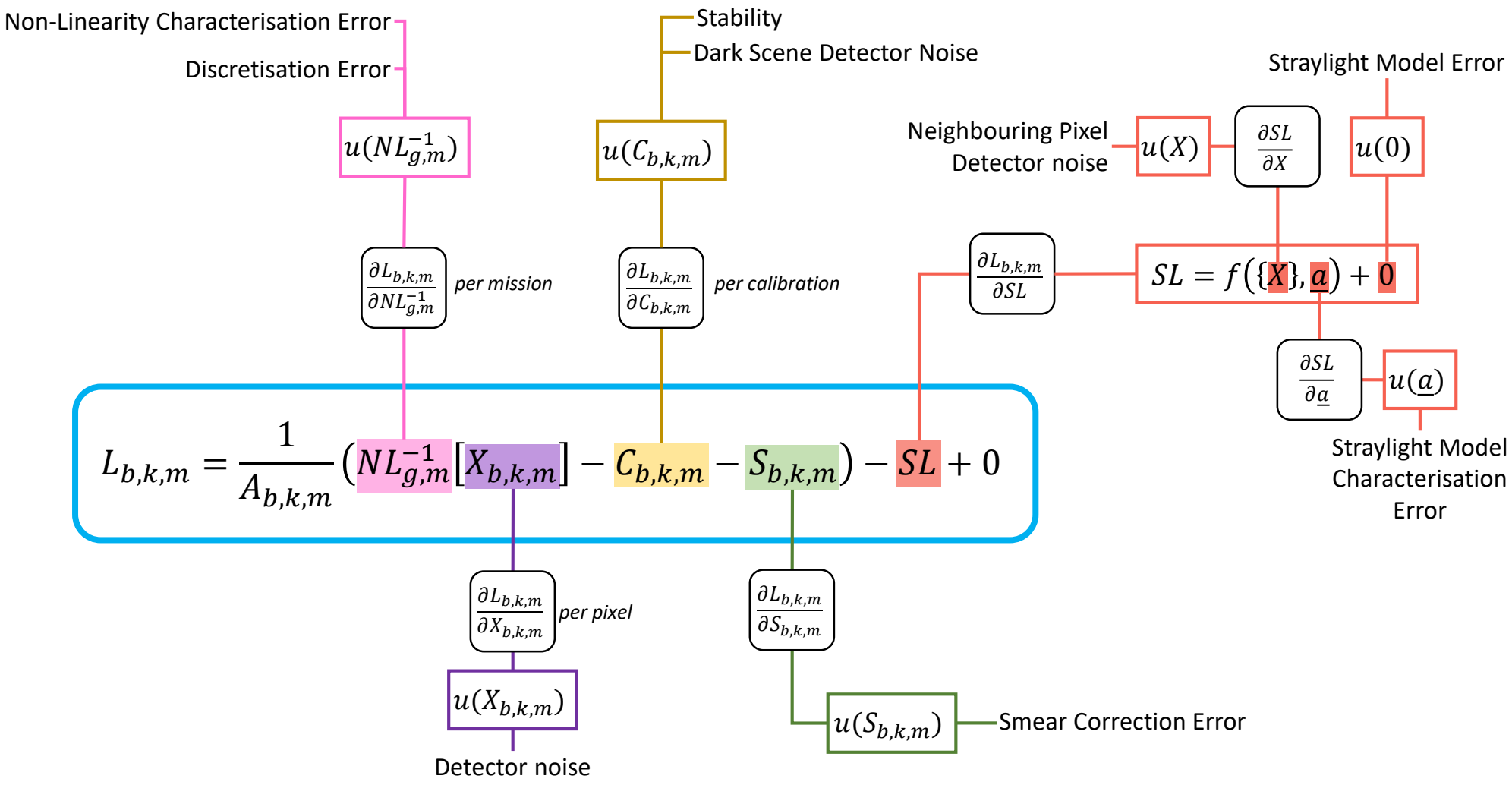

OLCI Level 1 Uncertainty Tree Diagram

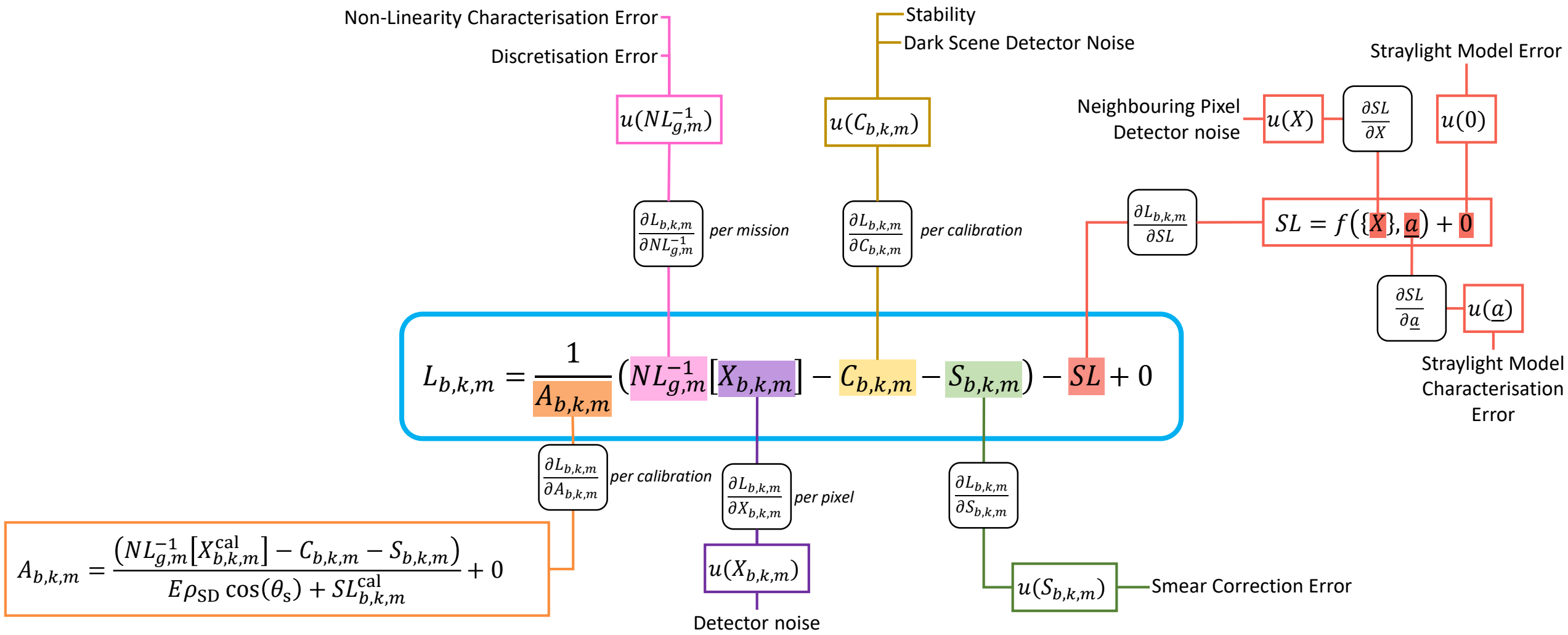

OLCI Level 1 Uncertainty Tree Diagram

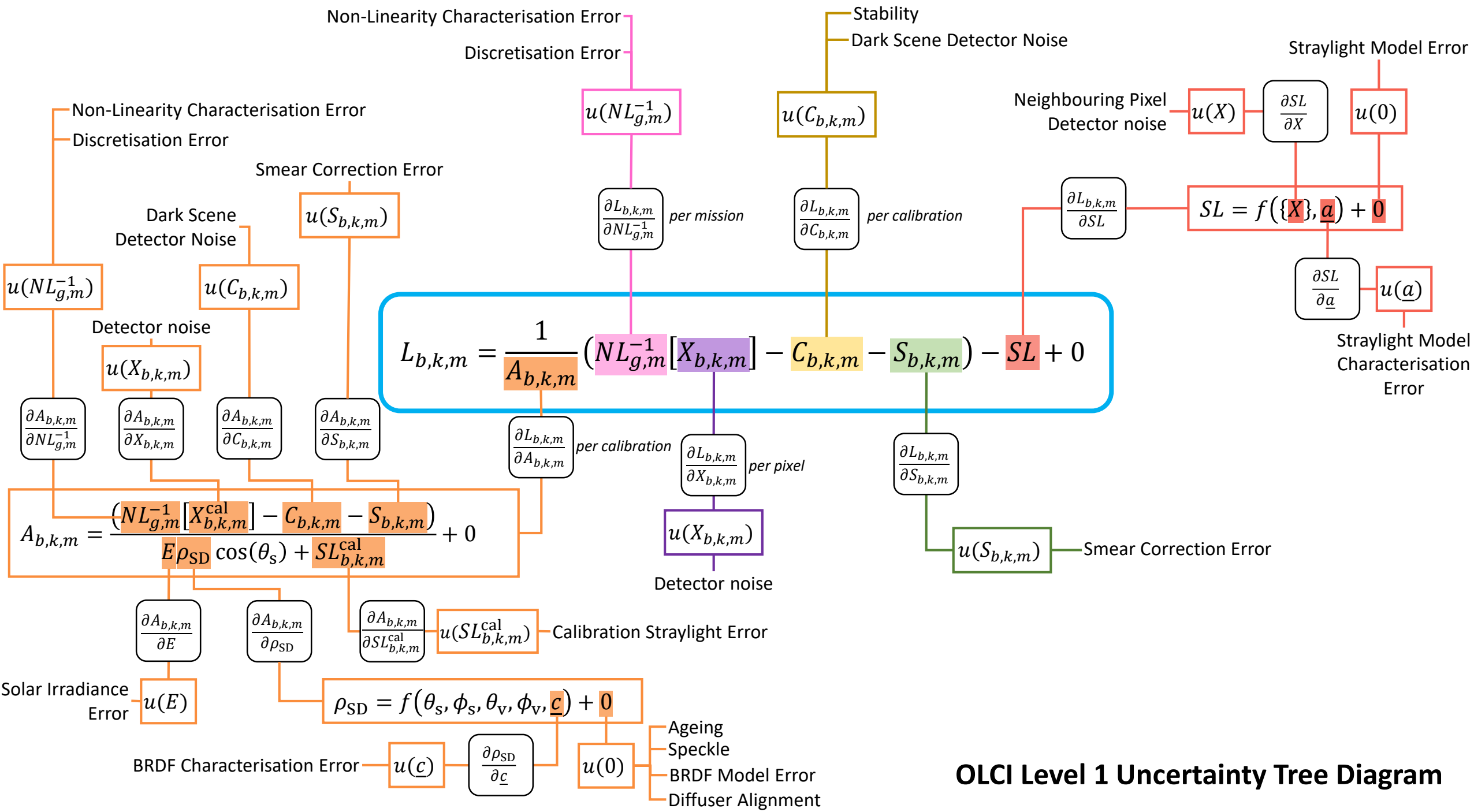

OLCI Level 1 Uncertainty Tree Diagram

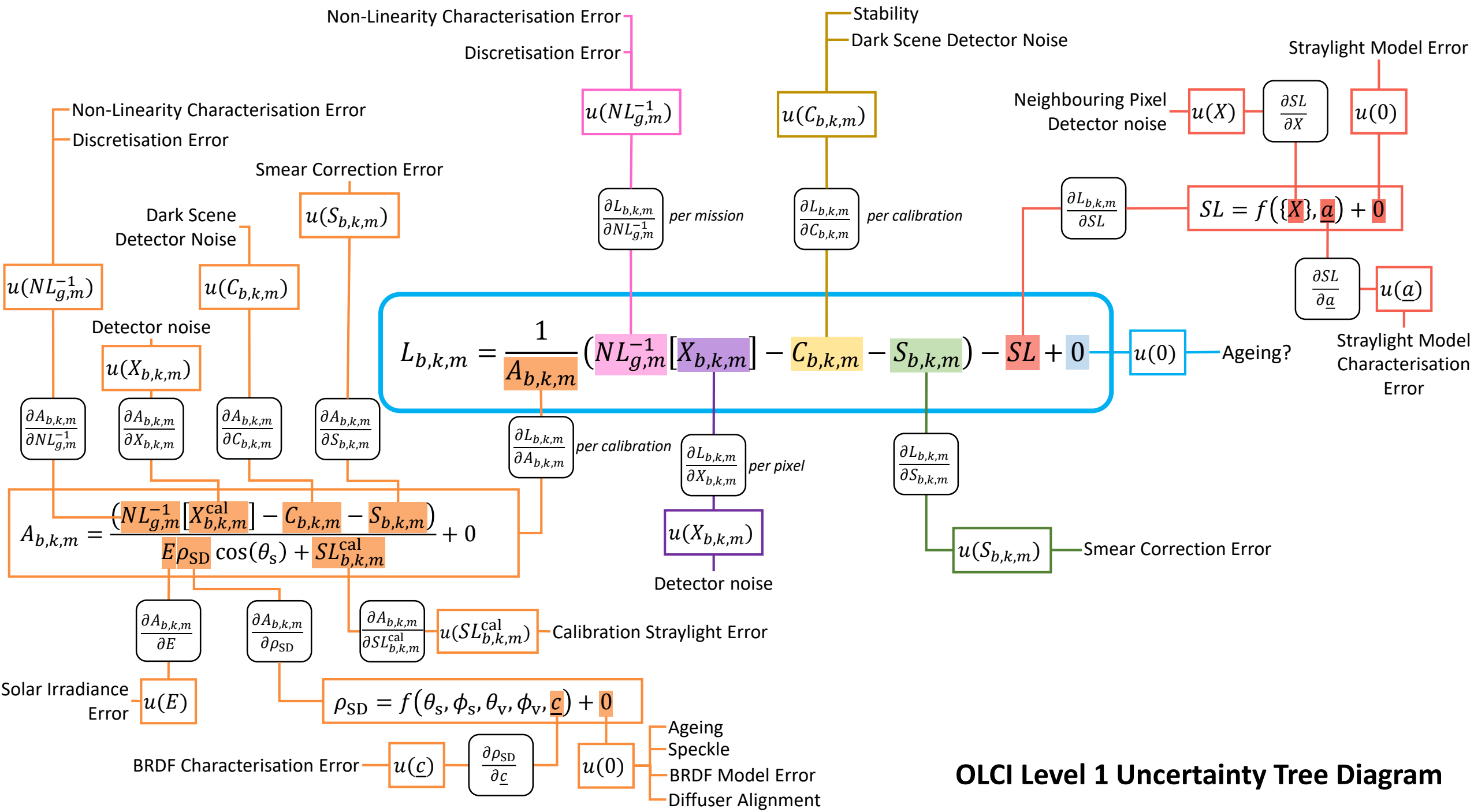

OLCI Level 1 Uncertainty Tree Diagram

Comments & Questions

- Focus prelaunch on requirement compliance not scientific understanding
- Much, if not all, the work required scientifically is completed prelaunch but important information can be trapped in commercially sensitive documents
- Metrological consultation in early phase of mission can save a lot of work later – FIDUCEO-style analysis can help organise and prioritise work
- How to disseminate to users – file formats etc.